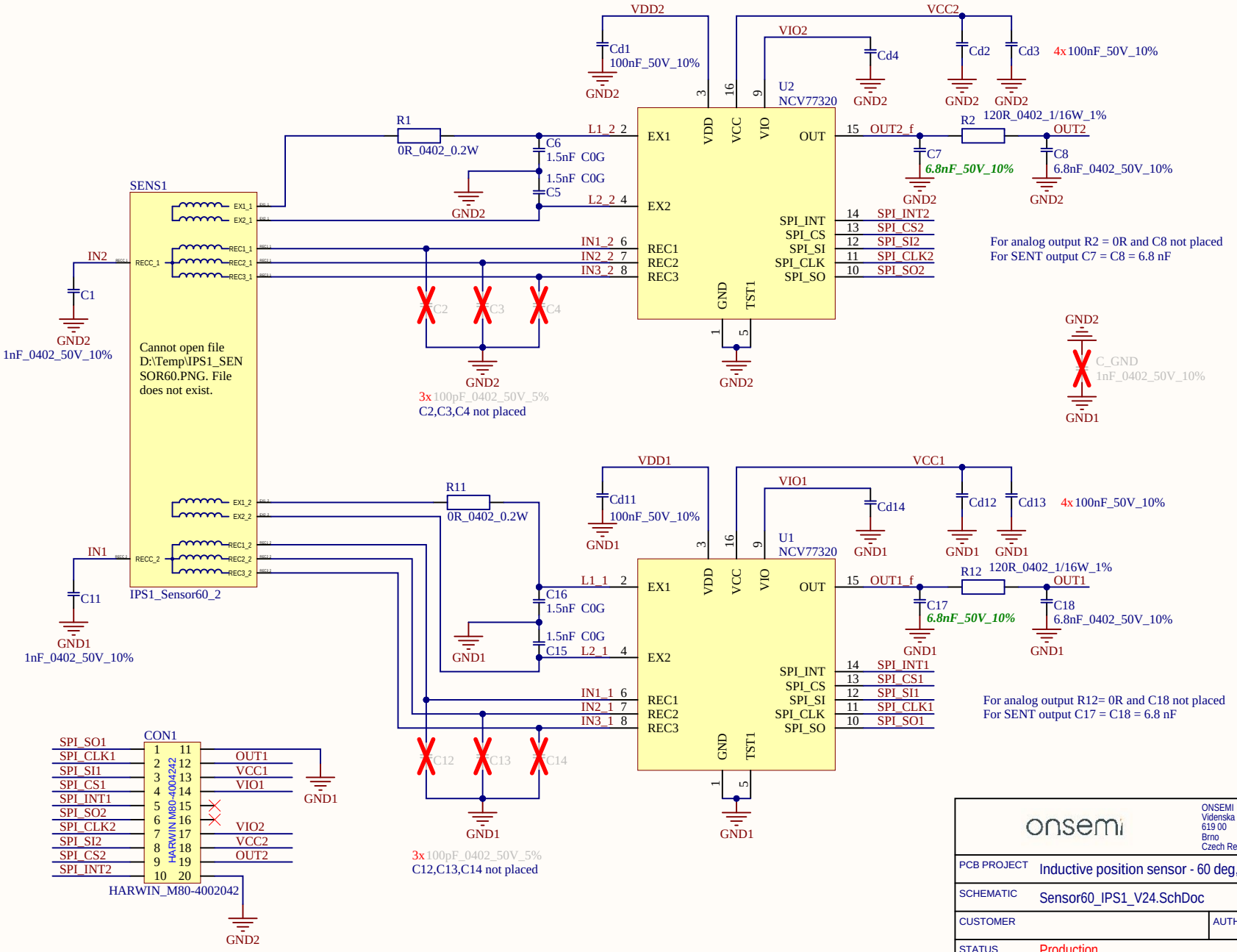

ONSEMI
Videnska 125
619 00
Brno
Czech Republic

PCB PROJECT	Inductive position sensor - 60 deg, dual	VARIANT	Assembly_SENT
SCHEMATIC	Sensor60_IPS1_V24.SchDoc		
CUSTOMER		AUTHOR	Peter Hus
STATUS	Production		

Size	REV.	SHEET No.	TOTAL SHEETS	TIMESTAMP	REVISION
A4	2.4	1	1	11/09/2023 14:20:58	2.4

1.2C