Bluetooth® 5.2 Wireless MCU

NCV-RSL15

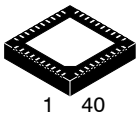

QFNW40 6x6, 0.5P
CASE 484BC

MARKING DIAGRAM

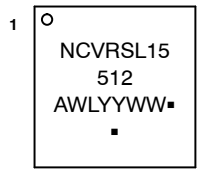

NCVRSL15512	= Specific Device Code
A	= Assembly Location
WL	= Wafer Lot
YY	= Year
WW	= Work Week
▪	= Pb−Free Package

(Note: Microdot may be in either location)

ORDERING INFORMATION

See detailed ordering and shipping information on page 2 of this data sheet.

Throughout this document, in reference to memory sizes, the unit kB denotes 1024 Bytes.

Introduction

RSL15 is an ultra−low power secure Arm® Cortex®−M33 processor−based Bluetooth Low Energy 5.2 wireless MCU designed for connected smart automotive applications. The comprehensive, yet easy−to−use Software Development Kit (SDK) provides sample applications that demonstrate the hardware capabilities to enable security with the Cybersecurity Platform, acquire sensor data in Smart Sense mode, configure the built−in power management and utilize Bluetooth Low Energy features. Specially designed and qualified for the unique needs of automotive, NCV−RSL15 comes in wettable flank−plated packaging, and a higher operating temperature range.

Key Features

- Automotive Ready
  - Wettable Flank−plated Packaging
- AEC−Q100 Grade 2
  - Operating Temperature Range −40°C to +105°C
  - PPAP Ready
- Bluetooth Low Energy 5.2 Certified with Key Features:
  - Up to 10 Simultaneous Connections
  - Long Range (Coded PHY)
  - 2 Mbit PHY (High Speed)
  - Angle of Arrival (AoA) and Angle of Departure (AoD)
  - Extended Advertising
  - Backwards Compatibility and Support for Earlier Bluetooth Low Energy Specifications Including 5.1, 5.0, 4.2, 4.1 and 4.0
- Ultra−low Power Operation:
  - Sleep Mode (GPIO Wakeup) @ 3 V VBAT: 40 nA
  - Sleep Mode (Crystal Oscillator, RTC Timer Wakeup) @ 3 V VBAT: 100 nA
  - Smart Sense Mode Allows Some Digital and Analog Peripherals to Remain Active to Monitor and Acquire Data from External Sensors at a Very Low System−level Power Consumption
  - Continuous ADC Operation in Smart Sense Mode with Wakeup on ADC Threshold @ 3 V VBAT: 206 nA
  - Peak Rx Current 1 Mbps @ 3 V VBAT: 2.7 mA
  - Peak Tx Current 0 dBm Output Power @ 3 V VBAT: 4.3 mA
  - Non−Connectable Advertising at 5 s Intervals @ 3 V VBAT: 1.1 μA (Average)
  - Connectable Advertising at 5 s Intervals @ 3 V VBAT: 1.3 μA (Average)
- Rx Sensitivity (BLE Mode, 1 Mbps): −96 dBm
- Rx Sensitivity (BLE Mode, 2 Mbps): −94 dBm
- Configurable Tx Power: −17 dBm to +6 dBm

Key Features (continued)

- Arm Cortex−M33 Processor Clocked up to 48 MHz
- Cybersecurity Platform with Arm CryptoCell™−312 for End−to−end Product Security with Secure Boot, Root of Trust, Lifecycle Management, Secure Key Management, and Application and Data Security
- Arm TrustZone® to Enable Secure Execution Zones
- 512 kB Flash Memory
- 80 kB RAM (64 kB User RAM, 16 kB RAM for Baseband)
- Flexible Power Management:
  1.2 V – 3.6 V VBAT.
  Directly Connect 1.5 V Silver−oxide or 3 V Coin Cells without Any External Active Components
- Two SPI Ports with QSPI Capability

© Semiconductor Components Industries, LLC, 2019

ORDERING INFORMATION

Device	Package	Shipping†
NCV−RSL15−512−101Q40−AVG	QFNW40 (Pb−Free)	3500 Tape/Reel

†For information on tape and reel specifications, including part orientation and tape sizes, please refer to our Tape and Reel Packaging Specifications Brochure, BRD8011/D.

APPLICATIONS

Automotive

- Smart Vehicle Access
- Tire Pressure Monitoring System (TPMS)
- Tire Monitoring System (TMS)
- Seat Belt Detection
- Cable Replacement
- Instrument Cluster

HIGH−LEVEL BLOCK DIAGRAM

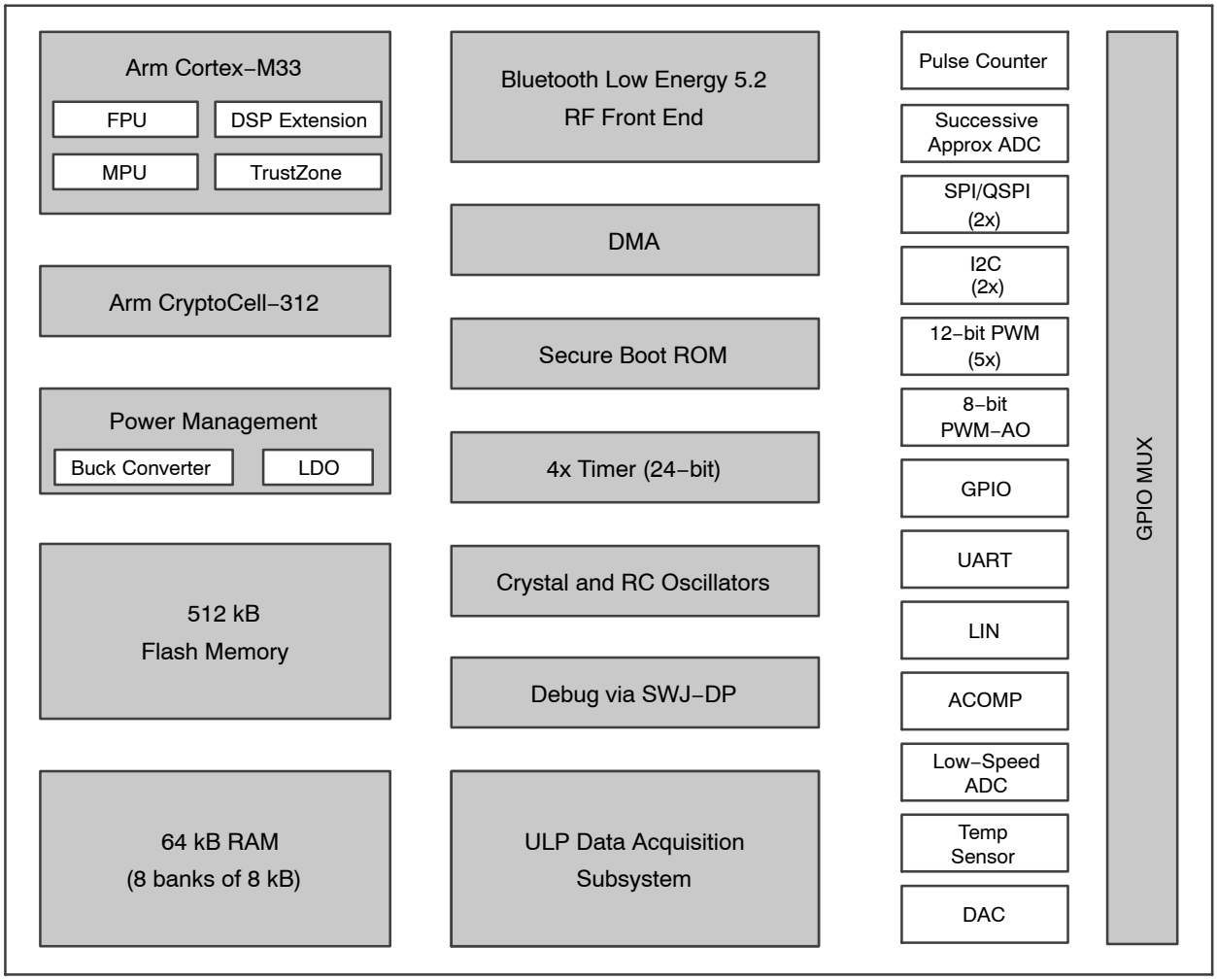

Figure 1. NCV High−Level Block Diagram

FEATURES

Arm Cortex−M33 Processor

The Cortex−M33 32−bit Armv8−M processor is designed for IoT and deeply embedded applications that require high performance, power efficiency and security. The processor has many features to execute high performance applications such a Floating−Point Unit (FPU), DSP extensions and Memory Protection Unit (MPU). Secure debug is done through the SWJ−DP which combines JTAG−DP and SW−DP for either JTAG probe or Serial Wire Debug (SWD) connection.

Cybersecurity Platform

The Cortex−M33 processor with TrustZone Armv8−M security extensions forms the basis of the security platform. The Arm CryptoCell−312 allows for end−to−end product security with Secure Boot with Root of Trust, secure lifecycle management, secure key management, and application and data encryption using symmetric or asymmetric cryptography. Arm TrustZone enables secure software access control. User available cryptographic services such as SHA1, SHA256, keyed−hash message authentication code (HMAC) and True Random Number Generator (TRNG) allow for development of custom proprietary security solutions. The TRNG conforms to NIST SP800−90B, NIST SP800−22, FIPS 140−2, and BSI AIS−31.

Please note that this mobile telecommunications Radio Access Network (RAN) equipment is designed for civil use, which also meet the provisions of paragraphs a.2 to a.4 of the Cryptography Note (Note 3 in Category 5—Part 2), having an RF output power limited to 0.1 W (20 dBm) or less, and supporting 16 or fewer concurrent users.

RF Subsystem

The RF architecture is based on a 2.4 GHz RF Front End that implements the physical layer of the BLE 5.2 standard as well as other proprietary or custom protocols. The modem is of the FSK type with a single−ended RF Port, which alleviates the need for an external balun.

RF Operation

Bluetooth 5.2 certified baseband and protocol stack has features such as 2 Mbps RF link, Angle−Of−Arrival, Angle−Of−Departure, and Coded PHY (“Long Range”). The hardware enables implementation of custom protocols.

Localization

RSL15 supports Angle−of−Arrival (AoA) and Angle−of−Departure (AoD) as defined by the Bluetooth Low Energy standard along with RSSI for enhanced localization capabilities.

Flexible Power Management

Built−in DC−DC converter with buck and LDO modes requiring few external passive components allows for a broad voltage supply range. Any voltage in the range of 1.2 V to 3.6 V can be used directly without the need for external power conversion allowing for simple use of common coin cell batteries such as 3 V coins cells and 1.5 V silver oxide cells.

Power Modes

Several power modes are available to reduce power consumption while still maintaining system responsiveness. Each mode is configurable with RAM retention and wakeup sources. Smart Sense mode allows some digital and analog peripherals to remain active to monitor and acquire data from external sensors at a very low system−level power consumption.

Flexible Clocking

Two crystal oscillators and two internal RC oscillators are available on RSL15 to offer many clocking configurations. The primary oscillator is based on a 48 MHz crystal, which is necessary for any connected RF operation. The secondary oscillator is based on a 32 kHz crystal, which can be used for precision timing even in low power modes. When precision timing is not required, the internal fast RC oscillator can be used in place of the 48 MHz crystal oscillator for general non−RF processing. Likewise, the internal 32 kHz RC oscillator can be used in place of the 32 kHz crystal oscillator for certain use cases. Additionally, 48 MHz and 32 kHz external clocks can be driven into RSL15 from external clock sources.

Analog to Digital Converters (ADCs)

RSL15 has two ADCs, a high−speed 12−bit SAR ADC for fast conversion of analog inputs up to 2 Msps and Low Speed ADC for slower conversion up to 50 ksps. There is also an integrated temperature sensor that can be read by the Low Speed ADC.

Flexible I/O

General purpose I/O can be mapped to GPIO, SPI, QSPI, I2C, UART, LIN, PWM, PCM, pulse counter, clock input/output and analog functions. RSL15 facilitates an analog comparator, as well as a DAC for generating bias voltages for external components.

Memory Architecture

The memory architecture is centered around the Arm Cortex−M33. The flash memory contains application code as well as the protocol stack. The RAM architecture is flexible allowing for powering only the amount of memory needed for the application. A total of 64 kB user RAM is available, implemented as eight times 8 kB. An additional 16 kB is available for the digital baseband hardware. A DMA controller is available for easy data streaming between a peripheral/interface and memories.

Software Development Kit

Contains Eclipse−based **onsemi** IDE plus support for other industry standard development environments, Bluetooth protocol stack, sample applications, libraries and many other software components and tools to enable rapid application development.

RoHS Compliant Device

RSL15 is RoHS compliant.

ARCHITECTURE OVERVIEW

Introduction

RSL15 is a highly integrated secure Arm Cortex−M33 based Bluetooth Low Energy 5.2 wireless MCU system−on−chip with flash and RAM, built−in power management and an extensive set of peripherals. The wide supply voltage input, flexible I/O and clocking scheme offer maximum design flexibility.

Detailed Block Diagram

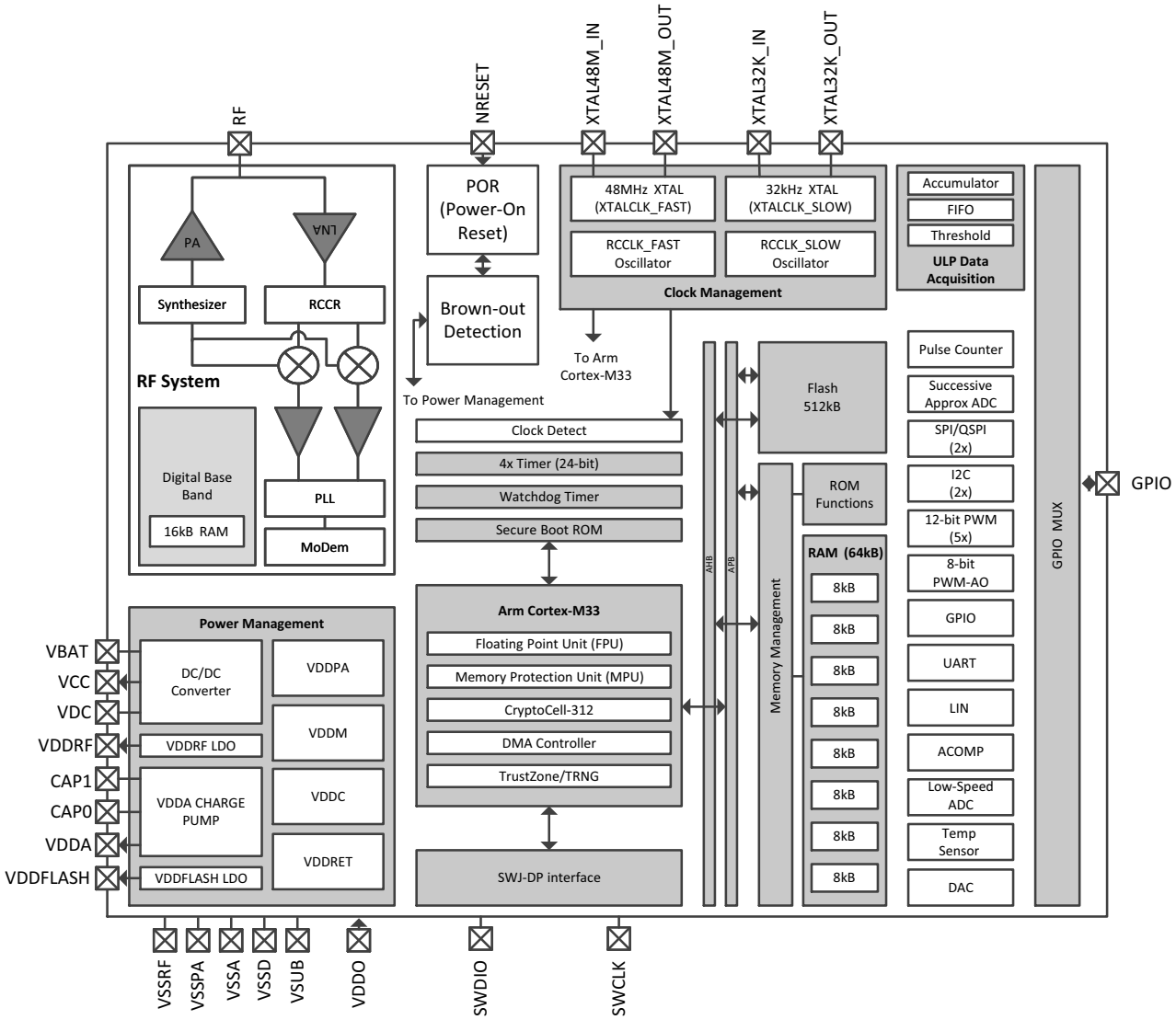

Figure 2. NCV−RSL15 Detailed Block Diagram

Arm Cortex−M33 Processor

The Cortex−M33 32−bit Armv8−M processor is designed for IoT and deeply embedded applications that require high performance, power efficiency and security. The processor has many features to execute high performance applications such a Floating−Point Unit (FPU), DSP extensions and Memory Protection Unit (MPU). Secure debug is done through the dedicated Serial Wire Debug Port (SW−DP) interface.

DMA Controller

The Direct Memory Access (DMA) Controller allows background transfers between peripherals and memories without processor intervention. The processor can be in a low power state or used for other computational tasks while the transfer occurs. The DMA is connected to the processor, peripherals and RAM memories and has four independent channels.

Cybersecurity Platform

The Cortex−M33 processor with TrustZone Armv8−M security extensions forms the basis of the security platform that is extended with Arm CryptoCell−312.

Secure Boot with Root of Trust

The secure boot ROM authenticates firmware in flash with a certificate−based mechanism using a private−public key scheme. This is the basis of the hardware Root of Trust. This same mechanism ensures continuity of the hardware Root of Trust after secure Firmware−Over−The−Air (FOTA) update.

Data and Application Encryption

User available cryptographic services including AES−128, AES−256, SHA−256, Hash Message Authentication Code (HMAC), PKA (Public Key Accelerator), ChaCha and AIS−31 compliant True Random Number Generator (TRNG) allow for development of custom proprietary security solutions.

TrustZone

Enables secure software access control to protect critical software and hardware resources.

Secure Lifecycle State Management

Lifecycle states refers to the multiple states RSL15 could go through during its lifetime. The first lifecycle state is the Chip Manufacture (CM) Lifecycle State. The device manufacture transitions to the Device Manufacture (DM) Lifecycle State. At field deployment, it is transitioned to the Secure (SE) Lifecycle State. A Return to Manufacturer (RMA) State is also available. Lifecycle state management ensures the authenticity, integrity and confidentiality of code and data belonging to different stakeholders at each lifecycle.

In addition to the Secure Lifecycle States, an Energy Harvesting (EH) Mode is available for applications that require fast cold startup (initial application of VBAT) but do not require secure boot with Root of Trust. This mode is especially useful when RSL15 is used in energy harvesting systems.

RF Subsystem

The RSL15 2.4 GHz radio front−end implements the physical layer for the Bluetooth Low Energy standard and other standard, proprietary, or custom protocols.

It operates in the worldwide deployable 2.4 GHz ISM band (2.4000 to 2.4835 GHz).

RF Architecture

The 2.4 GHz radio front−end is based on a low−IF architecture and comprises the following building blocks:

- High performance single−ended RF port which alleviates the need for an external balun
- On−chip matching network with 50 Ω RF input
- Low power LNA (low noise amplifier), and mixer
- PA (Power Amplifier) with up to +6 dBm output power for Bluetooth
- RSSI (Received Signal Strength Indication) with 60 dB nominal range with 1 dB steps (not considering AGC)
- Fully integrated ultra−low power frequency synthesis with fast settling time, with direct digital modulation in transmission (pulse shape programmable)
- 48 MHz XTAL reference
- Fully−integrated FSK−based modem with programmable pulse shape, data rate, and modulation index
- Digital baseband (DBB) with link layer functionalities, including automatic packet handling with preamble & sync, CRC, and separate Rx and Tx 128−bytes FIFOs
- The 2.4 GHz radio front−end contains also a highly−flexible digital baseband − in terms of modulation schemes, configurability and programmability – in order to support Bluetooth Low Energy technology and proprietary protocols. It allows for programmable data rates from 62.5 kbps up to 2 Mbps, FSK with programmable pulse shape and modulation index.
- The 2.4 GHz radio front−end also includes Manchester encoding and Data whitening. The packet handling includes:
  - ♦ Automatic preamble and sync word insertion
  - ♦ Automatic packet length handler
  - ♦ Basic address check
  - ♦ Automatic CRC calculation and verification with a programmable CRC polynomial
  - ♦ Multi−frame support
- Coexistence signals to identify the RF front−end is busy for Bluetooth or other traffic

Bluetooth Low Energy

RSL15 is Bluetooth 5.2 certified with the following Bluetooth LE features:

- Angle of Arrival (AoA) and Angle of Departure (AoD)
- LE Long Range (Coded PHY)

- 2 Mbit PHY (High Speed)
- LE Extended Advertising
- High Duty Cycle Non−Connectable Advertising
- LE Channel Selection Algorithm #2
- Advertising Channel Index
- GATT Caching
- HCI support for debug keys in LE Secure Connections
- Sleep clock accuracy update mechanism
- ADI field in scan response data
- Host channel classification for secondary advertising
- Periodic Advertising Sync Transfer
- Backwards compatibility and support for earlier Bluetooth Low Energy specifications including 5.1, 5.0, 4.2, 4.1 and 4.0

Power Management

The flexible power management of RSL15 allows for a wide range of battery voltages without the need for external power conversion. Two key modes of the DC−DC converter are:

1. BUCK Mode Operation
2. LDO Mode Operation

The power management unit is shown in Figure 3.

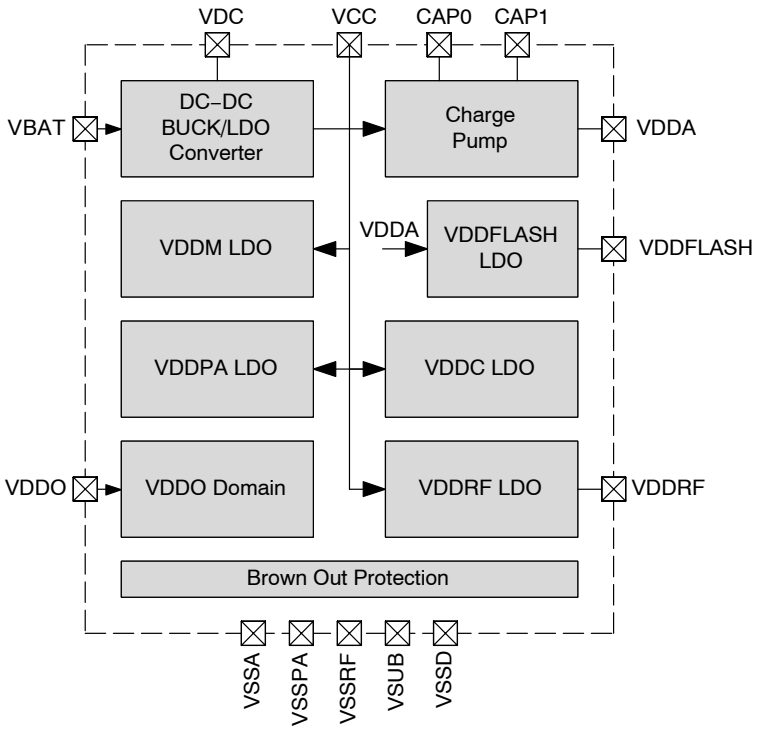

Figure 3. Power Management Unit

BUCK Mode can be used for battery voltages above 1.4 V. In this case the internal DC−DC converter regulates the battery voltage VBAT to a voltage VCC of approximately 1.2 V. The VCC voltage is then converted (using a charge pump) to an approximate 2.4 V voltage VDDA, which is used to power the analog blocks (excluding the RF Blocks). VCC and VDDA require external capacitors. Additionally, BUCK Mode Operation requires an inductor to be placed between the VCC and VDC pins.

LDO Mode is typically used for battery voltages at 1.4 V and below (but can be used for the entire operating voltage). In this case a linear LDO generates a voltage VCC of 1.2 V. A charge pump then generates a 2.4 V voltage for the analog blocks.

VDDRF is a regulated voltage used to supply the RF system. VDDRF is trimmed by **onsemi** as part of the device manufacturing process.

A separate supply exists for powering the flash, i.e. VDDFLASH. VDDFLASH is trimmed by **onsemi** as part of the device manufacturing process.

Three additional regulators generate voltages for the system (none require external components):

- VDDC is the voltage for the internal digital blocks – excluding digital RAM and GPIOs. VDDC is trimmed by **onsemi** as part of the device manufacturing process
- VDDM is the voltage for the RAM blocks. VDDM is trimmed by **onsemi** as part of the device manufacturing process
- VDDPA is the voltage used to supply the RF power amplifier (used in RF Tx mode). The VDDPA setting depends on the output power level selected

VDDO is an input to the RSL15 and constitutes the logical high level for the digital I/Os, i.e. if VDDO is connected to VBAT the GPIO signal swing will be between GND and VBAT.

The RSL15 power management unit allows for operation across wide temperature and voltages ranges at low power consumption and monitors the battery voltage to ensure reliable operation. If the battery voltage dips below the Power−On Reset (POR) voltage, a POR is asserted to the system. This also prevents possible damage to RSL15 when the battery is inserted or removed.

Reset

The Power Management Unit automatically resets the internal systems during power supply disruptions such as insufficient battery voltage or during battery insertion/removal. Upon power supply rise (such as battery insertion), the system is held in Power−On−Reset until sufficient internal voltages are reached and stabilized. When POR is released, the boot ROM execution begins using the RCCLK clock @ 3 MHz.

A reset can also be issued by software, watchdog timer expiration, invalid or missing clock detected by the clock detector, or by asserting the nRESET pin.

Power Modes Overview

The power modes are available to reduce power consumption while still maintaining system responsiveness. The low power modes are Sleep, Standby, Smart Sense and Idle.

Sleep Mode is the lowest power mode but with the longest wakeup time.

Standby Mode is low power but with faster wakeup time than Sleep Mode.

Smart Sense mode takes advantage of the low power capability of Sleep Mode but also allows some digital and analog peripherals to remain active with minimal processor intervention. Smart Sense mode allows RSL15 to not only remain responsive to external events, but also monitor and acquire data from external sensors with very low system−level power consumption.

Idle Mode allows for some power savings with the fastest wakeup time through disabling of internal clocks.

Sleep, Standby and Smart Sense modes have the ability of RAM retention (configurable amount of RAM to be retained) and allow for configurable wakeup sources.

Wakeup sources include GPIO transition (pin−based wakeup), timer, comparator, ADC threshold or sample FIFO full.

An overview of the power modes is shown in Table 1. The peripherals and subsystems available in each power mode are described below.

Table 1. POWER MODES OVERVIEW

Power Mode	Description
Sleep Mode	The lowest power mode. Processor and RF subsystem powered down and not clocked. Only selected wakeup sources are powered. Memory retention (and amount of memory retained) is optional. Some peripherals are available in Sleep Mode. On wakeup, the ROM restores the system before program execution begins.
Smart Sense Mode	Smart Sense Mode takes advantage of the low power capability of Sleep Mode but also allows some digital and analog peripherals to remain active with minimal processor intervention. Smart Sense Mode allows RSL15 to not only remain responsive to external events, but also monitor and acquire data from external sensors at a very low system−level power consumption.
Standby Mode	A low power mode with faster wakeup time than Sleep Mode. Processor and RF subsystem powered with lower voltage and not clocked. Only selected wakeup sources are powered. Memory retention (and amount of memory retained) is configurable. Some peripherals are available in Standby Mode. On wakeup, the program is executed directly out of retained RAM.
Idle Mode	A mode to save power for a short period of time when very fast wakeup is required. Processor, RF subsystem and memory powered as in Run Mode but not clocked.
Run Mode	Processor, RF subsystem and memory powered normally – clocks are active, all peripherals available.

Peripherals and Subsystems Availability in Power Modes

The different power modes allow for low power operation in many types of applications. When applications utilize one or more external sensors that require continued biasing regardless of the power mode of RSL15, it may be possible to use the VDDA voltage for this purpose.

VDDA can be kept active even in Sleep, Smart Sense and Standby Modes.

Table 2 describes the peripherals available in all power modes.

Table 2. POWER MODE PERIPHERAL AVAILABILITY

Component	Power Mode				
	Run	Idle	Standby	Smart Sense	Sleep
Processor	On	On	Off	Off	Off
Baseband/RF	On	On	Off	Off	Off
RAM Retention	N/A	N/A	N/A	Available	Available
CryptoCell	On	On	On or Off	On or Off	On or Off
RTC	On	On	On or Off	On or Off	On or Off
ULP Data Acquisition Subsystem	On	On	On or Off	On or Off	Off
Successive Approximation ADC	On	On	On or Off	On or Off	Off
Pulse Counter	On	On	On or Off	On or Off	Off
Comparator	On	On	On or Off	On or Off	On or Off
DAC	On	On	Off	Off	Off
ACS−PWM	On	On	On or Off	On or Off	On or Off
PWM	On	On	Off	Off	Off
Low Speed ADC	On	On	Off	Off	Off
32k Clock Output	On	On	On or Off	On or Off	On or Off
I2C	On	On	Off	Off	Off
SPI	On	On	Off	Off	Off
UART	On	On	Off	Off	Off
LIN	On	On	Off	Off	Off
PCM	On	On	Off	Off	Off
Temp Sensor	On	On	Off	Off	Off

ULP Data Acquisition Subsystem

The ULP Data Acquisition Subsystem comprises a small FIFO, Accumulator and Threshold Comparator that can be used in combination with the Successive Approximation ADC and pulse counter to perform data acquisition and rudimentary data processing and decision making. Available in all power modes.

This enables simple processing and storage of a limited number of samples from a pulse counter or the Successive Approximation ADC while in the low power mode, Smart Sense mode, for the lowest power operation.

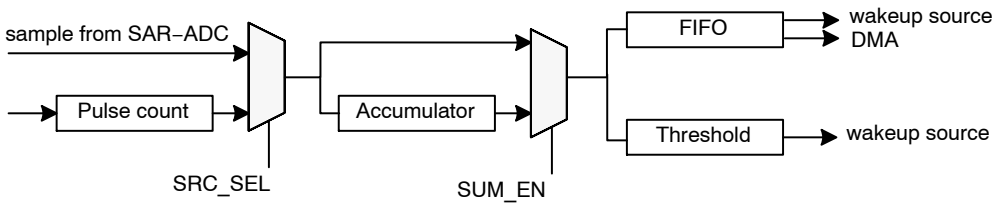

Figure 4. ULP Data Acquisition Subsystem.

The ULP Data Acquisition Subsystem has various features to further reduce power consumption such as Burst Sampling Mode, which allows for bursts of high speed sampling followed by an adjustable delay between sampling bursts.

The pulse counter can be configured to accept inputs from any of GPIO[3:0]. It counts pulses from these GPIOs during a set window ranging from 1 to 1024 clock cycles (based on a 32 kHz clock).

Overall, the ULP Data Acquisition Subsystem operation can be summarized as follows:

Accumulation

- An accumulation can be done with a configured number of samples ranging from 1 to 16 samples
- This mode is enabled when SUM_EN is set on Figure 4
- The accumulated value is stored in the FIFO

Threshold Detection

- Two thresholds can be configured: one when the input value goes higher than the threshold, and one when the input value goes lower than the threshold
- This mode allows the system to wake up after a configured number of consecutive samples generated are greater than or lower than the configurable threshold.

Acquisition

- Acquired samples are stored in the FIFO. FIFO size can be 1 to 16 samples

Clocking

Oscillators

The following oscillators are available:

- 48 MHz crystal oscillator (RFCLK) typically used in RUN Mode when RF operation is required. Prescalers exist to provide divided clocks (including system clock) to other parts of the system
- A fast RC oscillator (RCCLK) can provide an alternative to the 48 MHz crystal oscillator. However, RF operation is not possible using the fast RC Oscillator
- A 32 kHz crystal oscillator (XTAL32K) typically used in Sleep and Standby Modes for precision timing and to maintain the real−time clock (RTC)
- A slow RC oscillator (RC32) that can be an alternative to the 32 kHz crystal oscillator for certain use cases.

Clock Management

Flexible clock management allows the different clock sources to be used in power−efficient ways and to minimize external components. Internal RC oscillators can be used for fast startup and then easily switched to crystal oscillators when precision timing is required. Additionally, clocks can be sourced externally with the 48 MHz and 32 kHz clock inputs.

A built−in clock detector ensures a proper system reset in case the system clock goes below 2 kHz.

General Purpose Input/Output (GPIO)

RSL15 contains highly flexible general purpose input/output (GPIO) pins that can be configured as digital input or output, communication interfaces, clocks, wakeup sources or analog functions. Communication interfaces can be routed to any GPIO. Other functions are available on select GPIO, see section Pin Definition and Multiplexing.

Each GPIO has a software configurable pull up/down resistor, debounce LPF for I2C and four drive strengths options.

Analog

Successive Approximation ADC (SAR ADC)

The Successive Approximation ADC (SAR ADC) generates 12−bit samples up to 2 Msps sample frequency.

The SAR ADC is auto calibrated during operation for optimal INL/DNL performance.

Low Speed ADC Converter (LSAD)

This is a combined integrating and algorithmic ADC that has a resolution varying from 8 to 14 bits depending on configuration. While converting, the input signal can be integrated across one or more clock cycles (depending on configuration). ADC sampling rate can be up to 50 ksps. This ADC converter is also used to monitor the VBAT input voltage. It can also be configured to measure single ended or differential input voltages.

Pulse Counter

A pulse counter can be driven by one of GPIO[3:0]. It counts pulses from these GPIOs during a set interval.

Analog Comparator

RSL15 contains a low−power comparator that can be active in Standby, Sleep and Smart Sense mode. It has 3 different settings to trade off response time with power consumption, Low Power, Normal and High Speed, see section Analog Comparator Specifications (ACOMP).

DAC

RSL15 contains a low−power DAC that can be used for sensor biasing purposes. To optimize power consumption there is also a buffer that can be disabled if the load is high impedance.

Peripherals

Timers

There are four independent 24−bit timers that can operate as single−shot, multi−shot or free−run. An interrupt can be generated on timer expiration. Also, a GPIO interrupt can capture and store the current timer value.

Watchdog

The independent watchdog timer cannot be disabled. It must be reloaded at regular intervals. At the first timer expiration, an interrupt is generated and the timer is reloaded. At the second timer expiration, a reset is issued to the system.

PWM

The PWM (Pulse Width Modulation) controller can output on five independent channels with configurable period, duty cycle and offset. The PWM has 12−bit resolution with an optional 8−bit dithering per channel for lighting applications.

Additionally, one 8−bit ACS−PWM channel fixed on GPIO[4] can be operational in low power modes.

I2C

The I2C controller consists of 2 independent channels of the two−wire interface including a bidirectional clock line (SCL) and bidirectional data line (SDA). The I2C interface supports both master and slave mode operation. 100 kHz, 400 kHz and 1 MHz modes are supported.

SPI

The SPI controller consists of 2 independent channels with the standard 4−wire interface of SCLK, MOSI, MISO and CS supporting master and slave mode. Each channel also supports dual (DSPI) and quad (QSPI) modes in half or full duplex mode.

UART

The general−purpose Universal Asynchronous Receiver−Transmitter (UART) uses a standard data format with one start bit, eight data bits and one stop bit.

LIN

The Local Interconnect Network (LIN) is an asynchronous 2−wire interface. The LIN module operates as a responder node on the bus, supporting version 2.2 of the LIN specification.

PCM

The highly configurable PCM (Pulse Code Modulation) interface can be used to stream data in and out of RSL15.

RTC

The RTC timer consists of a 32−bit free−running up−counter, clocked by the 32 kHz clock.

Activity Counter

The activity counters help to analyze how long the system has been running, and how much the CPU and the flash have been used by the application in a period of time. This is useful information to estimate and optimize the power consumption of the application.

Asynchronous Clock Counter

The asynchronous clock counter measure the timing of a clock signal, such as STANDBYCLK or a clock provided on a GPIO input, relative to the system clock.

CRC

This block provides an implementation of two standard cyclic redundancy code (CRC) algorithms (CRC−CCITT and CRC−32) which, if used, can ensure data integrity of a user application's code and data.

Memory Map

The RSL15 memory map is shown in Figure 5 (512 kB flash version only).

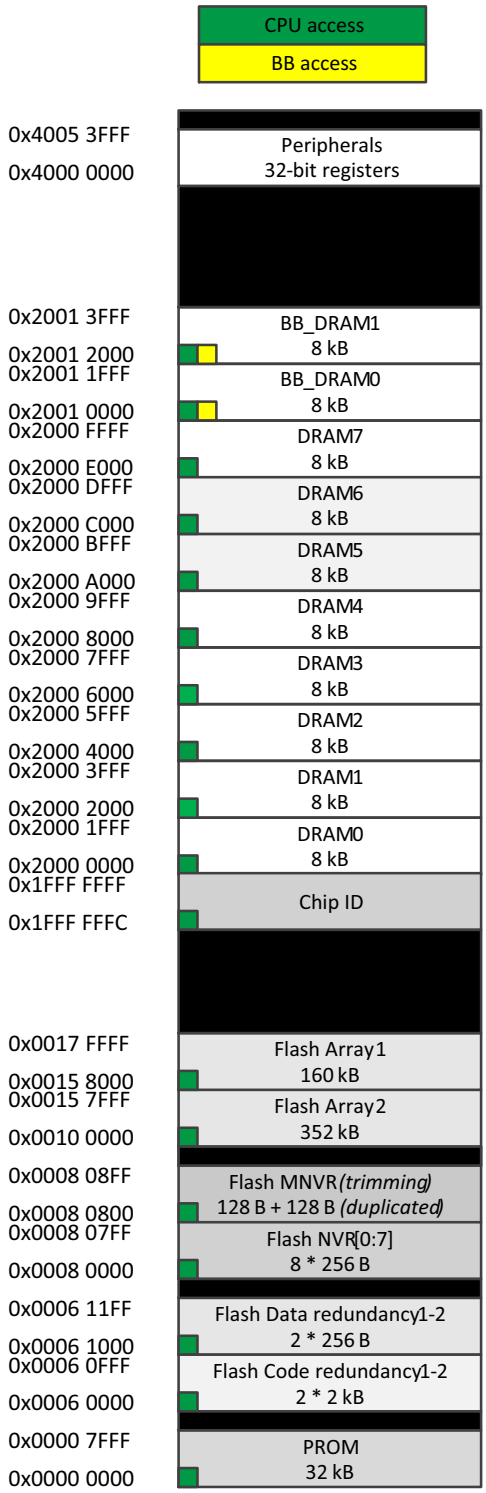

Figure 5. RSL15 Memory Map

ELECTRICAL SPECIFICATIONS

Absolute Maximum Ratings

Table 3. ABSOLUTE MAXIMUM RATINGS

Symbol	Parameter	Min	Max	Unit
VBAT	Power supply voltage input		3.63	V
VDDO	Digital I/O supply voltage input		3.63	V
VSSRF	RF front−end ground	−0.3		V
VSSA	Analog ground	−0.3		V
VSSC	Digital ground	−0.3		V
Vin	Voltage at any input pin	VSSC − 0.3	VDDO + 0.3	V
Vin to LSAD	Voltage at GPIO selected as LSAD input	VSSA − 0.3	VDDA + 0.3	V
RF	Maximum RF Input Power		18	dBm
T_{stg}	Storage temperature range (Note 1)	−40	150	°C
T_J	Junction Temperature		125	°C

Stresses exceeding those listed in the Absolute Maximum Ratings table may damage the device.

CAUTION: Class 2 ESD Sensitivity, AEC−Q100−002 (JS−001) HBM ±2000 V on all pins.
Class C1 ESD Sensitivity, AEC−Q100−011 (JS−002) CDM ±250 V on all pins.
Class II level A Latch up immunity AEC−Q100−004 (JESD78) ±100 mA on all pins.

1. Storage temperature applies after soldering to PCB.

General Operating Conditions

Table 4. GENERAL OPERATING CONDITIONS

Symbol	Parameter	Conditions	Min	Typ	Max	Unit
VBAT	DC−DC Converter Input Voltage	BUCK Mode	1.4		3.6	V
		LDO Mode	1.2		3.6	
	VBAT Supply Rise Time	Maximum rate of voltage rise			0.1	V/μs
VCC	DC−DC Converter / LDO Output Voltage (Note 2)		1	1.2	1.32	V
VDDA	Analog Blocks Supply Voltage Output (Note 2)	VDDA is generated by a charge pump that doubles the VCC voltage		2.4		V
VDDFLASH	Flash Supply Voltage Output (Note 2)		0.75	1.75	2.3	V
VDDO	Digital I/O Supply Input (Note 2)		1.2		3.6	V
VDDRF	RF Supply Output (Note 2)		1.0	1.1	1.21	V
SYS_CLK	System Clock		8 (Note 3)		48	MHz
	Operating Temperature		−40		105	°C
$VBAT_{POR}$	POR Voltage		0.4	0.8	1.0	V

If any limits in the General Operating Conditions table are exceeded, device functionality should not be assumed. Exposure beyond maximum operating conditions for extended periods may affect device reliability.

2. VCC, VDDA, VDDFLASH and VDDRF Outputs are for connections to external filtering capacitors only. These regulated voltages are used internally and are not intended for powering external devices.
3. Minimum SYS_CLK required for BLE Operation.

System Clock

The following table lists the sources and valid frequencies of System Clock.

Table 5. SYSTEM CLOCK

System Clock Frequency (MHz)	Source
1	EXTCLK
3	RC, EXTCLK
8	XTAL, EXTCLK
12	XTAL, RC, EXTCLK
16	XTAL, EXTCLK
24	XTAL, RC, EXTCLK
32	EXTCLK
48	XTAL, EXTCLK

4. To write to flash, System Clock source must be XTAL. To operate BLE, System Clock source must be XTAL at 8MHz or higher.
5. EXTCLK is an external digital clock source.

Power Consumption

RF Current Consumption

Table 6 shows key peak current consumption values for RF activity. Unless otherwise noted, the specifications mentioned in the table below are valid at 25°C, VBAT = VDDO (Buck mode for VBAT > 1.4 V, LDO mode for VBAT ≤ 1.4 V), 48 MHz (RFCLK) active, Radio ON and internal supplies trimmed to factory defaults.

Table 6. RF CURRENT CONSUMPTION

Operating Conditions	VBAT	DC Conversion	Min	Typ	Max	Unit
Radio Receive Mode Rx @ 125 kbps, 2.4 GHz 8 MHz system clock Cortex−M33 running BLE baseband only All Peripherals Disabled 64 kB RAM enabled	3.0 V	BUCK Mode		2.9		mA
	1.8 V	BUCK Mode		4.4		
	1.25 V	LDO Mode		6		
Radio Receive Mode Rx @ 500 kbps, 2.4 GHz 8 MHz system clock Cortex−M33 running BLE baseband only All Peripherals Disabled 64 kB RAM enabled	3.0 V	BUCK Mode		2.9		mA
	1.8 V	BUCK Mode		4.4		
	1.25 V	LDO Mode		6		
Radio Receive Mode Rx @ 1 Mbps, 2.4 GHz 8 MHz system clock Cortex−M33 running BLE baseband only All Peripherals Disabled 64 kB RAM enabled	3.0 V	BUCK Mode		2.7		mA
	1.8 V	BUCK Mode		4.3		
	1.25 V	LDO Mode		5.8		
Radio Receive Mode Rx @ 2 Mbps, 2.4 GHz 8 MHz system clock Cortex−M33 running BLE baseband only All Peripherals Disabled 64 kB RAM enabled	3.0 V	BUCK Mode		3.2		mA
	1.8 V	BUCK Mode		4.9		
	1.25 V	LDO Mode		6.7		
Radio Transmit Mode Tx @ 1 Mbps, 2.4 GHz, 0 dBm 8 MHz system clock Cortex−M33 running BLE baseband only All Peripherals Disabled 64 kB RAM enabled	3.0 V	BUCK Mode		4.3		mA
	1.8 V	BUCK Mode		6.7		
	1.25 V	LDO Mode		9.1		
Radio Transmit Mode Tx @ 1 Mbps, 2.4 GHz, 3 dBm 8 MHz system clock Cortex−M33 running BLE baseband only All Peripherals Disabled 64 kB RAM enabled	3.0 V	BUCK Mode		8		mA
	1.8 V	BUCK Mode		12.3		
	1.25 V	LDO Mode		16.9		
Radio Transmit Mode Tx @ 1 Mbps, 2.4 GHz, 5 dBm 8 MHz system clock Cortex−M33 running BLE baseband only All Peripherals Disabled 64 kB RAM enabled	3.0 V	BUCK Mode		10.6		mA
	1.8 V	BUCK Mode		16.5		
	1.25 V	LDO Mode		22.5		
Radio Transmit Mode Tx @ 1 Mbps, 2.4 GHz, 6 dBm 8 MHz system clock Cortex−M33 running BLE baseband only All Peripherals Disabled 64 kB RAM enabled	3.0 V	BUCK Mode		11.4		mA
	1.8 V	BUCK Mode		17.8		
	1.25 V	LDO Mode		24.1		

Run Mode Current Consumption

Table 7 shows key current consumption values for Run Mode. Unless otherwise noted, the specifications mentioned in the table below are valid at 25°C, VBAT = VDDO (Buck mode for VBAT > 1.4 V, LDO mode for VBAT ≤ 1.4 V), 48 MHz (RFCLK) active, Radio OFF and internal supplies trimmed to factory defaults.

Table 7. RUN MODE CURRENT CONSUMPTION

Operating Conditions	VBAT	DC Conversion	Min	Typ	Max	Unit
8 MHz system clock Executing CoreMark from Flash All peripherals disabled 64 kB RAM enabled	3.0 V	BUCK Mode		49		μA/MHz
	1.8 V	BUCK Mode		76		
	1.25 V	LDO Mode		106		
16 MHz system clock Executing CoreMark from Flash All peripherals disabled 64 kB RAM enabled	3.0 V	BUCK Mode		39		μA/MHz
	1.8 V	BUCK Mode		58		
	1.25 V	LDO Mode		84		
24 MHz system clock Executing CoreMark from Flash All peripherals disabled 64 kB RAM enabled	3.0 V	BUCK Mode		34		μA/MHz
	1.8 V	BUCK Mode		54		
	1.25 V	LDO Mode		77		
48 MHz system clock Executing CoreMark from Flash All peripherals disabled 64 kB RAM enabled	3.0 V	BUCK Mode		30		μA/MHz
	1.8 V	BUCK Mode		46		
	1.25 V	LDO Mode		65		
8 MHz system clock Executing CoreMark from RAM All peripherals disabled 64 kB RAM enabled	3.0 V	BUCK Mode		33		μA/MHz
	1.8 V	BUCK Mode		50		
	1.25 V	LDO Mode		71		
16 MHz system clock Executing CoreMark from RAM All peripherals disabled 64 kB RAM enabled	3.0 V	BUCK Mode		26		μA/MHz
	1.8 V	BUCK Mode		39		
	1.25 V	LDO Mode		55		
24 MHz system clock Executing CoreMark from RAM All peripherals disabled 64 kB RAM enabled	3.0 V	BUCK Mode		20		μA/MHz
	1.8 V	BUCK Mode		31		
	1.25 V	LDO Mode		51		
48 MHz system clock Executing CoreMark from RAM All peripherals disabled 64 kB RAM enabled	3.0 V	BUCK Mode		21		μA/MHz
	1.8 V	BUCK Mode		34		
	1.25 V	LDO Mode		50		

Idle Mode Current Consumption

Table 8 shows key current consumption values for Idle Mode. Unless otherwise noted, the specifications mentioned in the table below are valid at 25°C, VBAT = VDDO (Buck mode for VBAT > 1.4 V, LDO mode for VBAT ≤ 1.4 V), 48 MHz (RFCLK) active, Radio OFF and internal supplies trimmed to factory defaults.

Table 8. IDLE MODE CURRENT CONSUMPTION

Operating Conditions	Wakeup Source	VBAT	DC Conversion	Min	Typ	Max	Unit
System clock stopped 64 kB RAM enabled	GPIO	3.0 V	BUCK Mode		128		μA
		1.8 V	BUCK Mode		103		
		1.25 V	LDO Mode		156		

Standby Mode Current Consumption

Table 9 shows key current consumption values for Standby Mode. Unless otherwise noted, the specifications mentioned in the table below are valid at 25°C, VBAT = VDDO (Buck mode for VBAT > 1.4 V, LDO mode for VBAT ≤ 1.4 V), 48 MHz (RFCLK) inactive, Radio OFF and internal power supplies trimmed to factory defaults.

Table 9. STANDBY MODE CURRENT CONSUMPTION

Operating Conditions	Wakeup Source	VBAT	DC Conversion	Min	Typ	Max	Unit
Clocks stopped All peripherals disabled **8 kB RAM retained** 32 kHz RC32 inactive 32 kHz XTAL32K inactive	GPIO	3.0 V	BUCK Mode		17		μA
		1.8 V	BUCK Mode		20		
		1.25 V	LDO Mode		26		
Clocks stopped All peripherals disabled **16 kB RAM retained** 32 kHz RC32 inactive 32 kHz XTAL32K inactive	GPIO	3.0 V	BUCK Mode		17.5		μA
		1.8 V	BUCK Mode		21		
		1.25 V	LDO Mode		26		
Clocks stopped All peripherals disabled **32 kB RAM retained** 32 kHz RC32 inactive 32 kHz XTAL32K inactive	GPIO	3.0 V	BUCK Mode		17.6		μA
		1.8 V	BUCK Mode		21		
		1.25 V	LDO Mode		26		
Clocks stopped All peripherals disabled **64 kB RAM retained** 32 kHz RC32 inactive 32 kHz XTAL32K inactive	GPIO	3.0 V	BUCK Mode		18		μA
		1.8 V	BUCK Mode		21		
		1.25 V	LDO Mode		26		
Clocks stopped All peripherals disabled **8 kB RAM retained** **32 kHz RC32 active** 32 kHz XTAL32K inactive	RTC timer	3.0 V	BUCK Mode		21		μA
		1.8 V	BUCK Mode		22		
		1.25 V	LDO Mode		29		
Clocks stopped All peripherals disabled **8 kB RAM retained** 32 kHz RC32 inactive **32 kHz XTAL32K active**	RTC timer	3.0 V	BUCK Mode		19		μA
		1.8 V	BUCK Mode		21		
		1.25 V	LDO Mode		28		

Sleep Mode Current Consumption

Table 10 shows key current consumption values for Sleep Mode. Unless otherwise noted, the specifications mentioned in the table below are valid at 25°C, VBAT = VDDO (Buck mode for VBAT > 1.4 V, LDO mode for VBAT ≤ 1.4 V), 48 MHz (RFCLK) inactive, Radio OFF and internal supplies trimmed to factory defaults.

Table 10. SLEEP MODE CURRENT CONSUMPTION

Operating Conditions	Symbol	Wakeup Source	VBAT	DC Conversion	Min	Typ	Max	Unit
Clocks stopped All peripherals disabled **No RAM retained** 32 kHz RC32 inactive 32 kHz XTAL32K inactive	Ids1	GPIO	3.0 V	BUCK Mode		40		nA
			1.8 V	BUCK Mode		50		
			1.25 V	LDO Mode		70		
System clocks stopped All peripherals disabled **No RAM retained** **32 kHz RC32 active** 32 kHz XTAL32K inactive	Ids2	RTC timer	3.0 V	BUCK Mode		100		nA
			1.8 V	BUCK Mode		130		
			1.25 V	LDO Mode		200		
System clocks stopped All peripherals disabled **No RAM retained** 32 kHz RC32 inactive **32 kHz XTAL32K active**	Ids3	RTC timer	3.0 V	BUCK Mode		60		nA
			1.8 V	BUCK Mode		80		
			1.25 V	LDO Mode		120		
System clocks stopped All peripherals disabled **8 KB RAM retained** 32 kHz RC32 inactive **32 kHz XTAL32K active**	Ids4	RTC timer	3.0 V	BUCK Mode		180		nA
			1.8 V	BUCK Mode		260		
			1.25 V	LDO Mode		430		
System clocks stopped All peripherals disabled **16 KB RAM retained** 32 kHz RC32 inactive **32 kHz XTAL32K active**	Ids5	RTC timer	3.0 V	BUCK Mode		220		nA
			1.8 V	BUCK Mode		320		
			1.25 V	LDO Mode		530		
System clocks stopped All peripherals disabled **32 KB RAM retained** 32 kHz RC32 inactive **32 kHz XTAL32K active**	Ids6	RTC timer	3.0 V	BUCK Mode		300		nA
			1.8 V	BUCK Mode		440		
			1.25 V	LDO Mode		730		

ULP Data Acquisition Subsystem Performance

Table 11 shows key current consumption values for ULP Data Acquisition Subsystem in Smart Sense Mode. Unless otherwise noted, the specifications mentioned in the table below are valid at 25°C, VBAT = VDDO (Buck mode for VBAT > 1.4 V, LDO mode for VBAT ≤ 1.4 V), 48 MHz (RFCLK) inactive, Radio OFF and internal supplies trimmed to factory defaults.

Table 11. ULP DATA ACQUISITION SUBSYSTEM PERFORMANCE

Operating Condition	Min	Typ	Max	Unit
Continuous ADC operation in Smart Sense mode with wakeup on ADC threshold Configuration/conditions: VBAT = 3 V, BUCK Mode, Successive Approximation ADC enabled and selected, XTAL32K, VREF = VBAT reference selected, ADC Fs = 256 sps, accumulation 4 samples. Processor would wake to Run mode by ADC threshold but this is not included in this measurement		206		nA
Continuous ADC operation in Smart Sense mode, wakeup on FIFO full, transfer content to RAM Configuration/conditions: VBAT = 3 V, BUCK Mode, 16 kB RAM retained, XTAL32K, Successive Approximation ADC enabled, VREF = VBAT, ADC Fs = 1 ksps, accumulation 16 samples, FIFO Size 16. Processor wakes to Run mode every 256 ms to transfer samples to RAM		2.1		μA
Continuous ADC operation in Smart Sense mode, wakeup on FIFO full, transfer content to RAM Configuration/conditions: VBAT = 3 V, BUCK Mode, 16 kB RAM retained. XTAL32K, Successive Approximation ADC enabled, VREF = VDDA, ADC Fs = 1 ksps, Accumulation 16 samples, FIFO Size 16. Processor wakes to Run mode every 256 ms to transfer samples to RAM		4.1		μA
Continuous Pulse Counter accumulation in Smart Sense mode, wakeup when FIFO full, transfer content to RAM Configuration/conditions: VBAT = 3 V, BUCK Mode, 16 kB RAM retained, XTAL32K, Pulse Counter enabled, Pulse Count Interval 1000 ms, accumulation of 5 samples, result stored in FIFO. Processor wakes to Run mode every 5 s to transfer sample to RAM		348		nA

Wakeup Timing Specifications

Table 12. WAKEUP TIMING SPECIFICATIONS

Description	Symbol	Conditions	Min	Typ	Max	Unit
Cold startup − VBAT applied to entering RUN mode		To start of startup code execution (Energy Harvesting state)		2.4		ms
		To start of startup code execution (Secure state) using secure bootloader with two key certificates, one content certificate, debug port locked and application size of ~55 kB		236		
GPIO wakeup from Sleep mode to RUN mode, RAM execution		To start of wakeup function execution in RAM (startup code is not executed). VDDM retained		1.47 (Note 6)		ms
GPIO wakeup from Sleep mode to RUN mode, flash execution		To start of startup code execution		1.55 (Note 6)		ms
GPIO wakeup from Sleep mode to RUN mode, continuation from flash		To start of execution from last program counter address (startup code is not executed). VDDM retained		1.49 (Note 6)		ms
GPIO wakeup from Standby mode to RUN mode, continuation from flash		To start of execution from last program counter address (startup code is not executed). VDDC retained		125		μs
GPIO wakeup from IDLE mode to RUN mode, continuation from RAM or flash		To start of execution from last program counter address (startup code is not executed). VDDC retained		90		μs

6. Wakeup times may vary due to system capacitance and sleep period.

Table 13. EEMBC BENCHMARK SCORES (All RSL15 benchmark scores have been certified by EEMBC)

Description	Symbol	Conditions	Min	Typ	Max	Unit
EEMBC CoreMark				177		CoreMark
EEMBC ULPMark™ −CoreMark		Performance		60.5		
		Energy, Fixed Voltage		58.3		
		Energy, Best Voltage		63.1		
EEMBC ULPMark™ −CoreProfile		1.8 V		1220		
		3 V		1070		

RF Specifications

Table 14 shows key RF specifications. Unless otherwise noted, the specifications mentioned in the table below are valid at 25°C, VBAT = VDDO (Buck mode for VBAT > 1.4 V, LDO mode for VBAT ≤ 1.4 V).

Table 14. RF SPECIFICATIONS

Description	Symbol	Conditions	Min	Typ	Max	Unit
GENERAL RADIO SPECIFICATIONS						
RF Input Impedance	Z_{in}			50		Ω
Input reflection coefficient	S_{11}				−8	dB
Data Rate	R_{FSK}	FSK/MSK/GFSK (OQPSK as MSK)	62.5	1000	3000	kbps
		4−FSK			4000	kbps
SYNTHESIZER SPECIFICATIONS						
Frequency Range	F_{RF}		2360		2500	MHz
Rx Frequency Step		Receive mode frequency synthesizer resolution			100	Hz
Tx Frequency Step		Transmit mode frequency synthesizer resolution			600	Hz
PLL Settling Time		Receive Mode		15	25	μs
PLL Settling Time		Transmit Mode		5	10	μs
RECEIVE MODE SPECIFICATIONS						
BLE Sensitivity LDO mode, VBAT = 1.8 V or 3.0 V Buck mode, VBAT = 1.8 V		1 Mbps, 0.1% BER		−96		dBm
		2 Mbps, 0.1% BER		−94		dBm
		500 kbps, 0.1% BER, BLE Long Range		−98		dBm
		125 kbps, 0.1% BER, BLE Long Range		−102		dBm
BLE Sensitivity Buck mode, VBAT = 3.0 V (QFN)		1 Mbps, 0.1% BER		−94		dBm
		2 Mbps, 0.1% BER		−91		dBm
		500 kbps, 0.1% BER, BLE Long Range		−96		dBm
		125 kbps, 0.1% BER, BLE Long Range		−100		dBm
Rx sensitivity degradation VSWR1:4		Any phase relative to 50 Ω		3.5		dB
RSSI effective range		Without AGC		60		dB
RSSI step size				2.4		dB
Rx AGC Range				48		dB
Rx AGC Step Size		Programmable		6		dB
Max usable input signal level		0.1% BER		0		dBm

Table 14. RF SPECIFICATIONS (continued)

Description	Symbol	Conditions	Min	Typ	Max	Unit
TRANSMIT MODE SPECIFICATIONS						
Transmit power range		BLE, VDDPA is required for ≥ +3 dBm or in low voltage conditions	−17		+6 (Note 7)	dBm
Transmit power step size				1		dBm
Transmit power accuracy		Tx power 0 dBm. Full band. Relative to the typical value.	−1.5		+1.5	dBm
		Tx power 3 dBm. Full band. Relative to the typical value.	−1.5		+1.5	dBm
		Tx power 6 dBm. Full band. Relative to the typical value.	−1.5		+1.5	dBm
Power in 2nd harmonic		0 dBm output level		−35		dBm
Power in 3rd harmonic		0 dBm output level		−40		dBm
Power in 4th harmonic		0 dBm output level		−45		dBm
Power in 2nd harmonic with EVB harmonic filter		0 dBm output level		−55		dBm
Power in 3rd harmonic with EVB harmonic filter		0 dBm output level		−60		dBm
Power in 4th harmonic with EVB harmonic filter		0 dBm output level		−60		dBm
Tx power degradation VSWR 1:4		Any phase relative to 50 Ω, for 0 dBm output level		2.5		dB

7. At +6 dBm Tx power, an antenna gain of +2.2 dBi or less must be used to ensure out−of−band regulatory emissions compliance.

Flash Specifications

Table 15. FLASH SPECIFICATIONS

Description	Symbol	Conditions	Min	Typ	Max	Unit
Flash sector endurance		Code and Data Array	50			kcycles
		NVR Array	1			
Flash content retention period		T = 55°C	25			years
Sector erase time				1	4	ms
Mass write time					10	ms

Oscillator Specifications

Table 16. 32 kHz CRYSTAL OSCILLATOR (XTAL32K)

Parameter	Symbol	Conditions	Min	Typ	Max	Unit
Crystal Frequency	XTAL32K			32.768		kHz
Startup time		VBAT applied to stabilization		1	3	s
Internal load		Internal capacity to match crystal unit load capacity. Steps of 0.4 pF	0		25.2	pF
External load Capacitance		Maximum external capacity allowed (package, routing, etc.)			3.5	pF
Internal ESR					100	kΩ
Operating current		Using optimal external component (low CL and ESR)		25		nA
Duty cycle			40	50	60	%

Table 17. SLOW RC OSCILLATOR (RC32)

Parameter	Symbol	Notes	Min	Typ	Max	Unit
Factory trimmed frequency	RC32			32.768		kHz
Startup time		After VBAT applied			2	ms
Current consumption		Temperature comp enabled		120		nA

Table 18. 48 MHz CRYSTAL OSCILLATOR (RFCLK)

Parameter	Symbol	Notes	Min	Typ	Max	Unit
Crystal Frequency	RFCLK			48		MHz
Startup time		After VBAT Applied			1.5	ms
Recommended XTAL parameter ESR		Equiv. Series res.	20		80	Ω
Recommended XTAL parameter CL		Differential equivalent load capacitance. The effective differential capacitance (XTAL and parasitics) must be <1 pF, the remaining being capacitance to ground (parasitic completed by on−chip load capacitance).	6	8	10	pF
Operating current				100		μA
Duty cycle			40		60	%

NOTE: RFCLK (48 MHz crystal) must be the clock source when writing to Flash.

Table 19. FAST RC OSCILLATOR (RCCLK)

Parameter	Symbol	Notes	Min	Typ	Max	Unit
Fast RC Oscillator Output Frequency	RCCLK	3 MHz Output		3		MHz
		12 MHz Output		12		
		24 MHz Output		24		
Fast RC Oscillator temperature coefficient (Note 8)		T = 0 to +45°C, 3 MHz Output	−1.5		1.5	%
		T = −40 to +85°C, 3 MHz Output	−3.5		3.5	
		T = 0 to +45°C, 12 MHz Output	−5		5	%
		T = −40 to +85°C, 12 MHz Output	−15		15	%
		T = 0 to +45°C, 24 MHz Output	−10		10	%
		T = −40 to +85°C, 24 MHz Output	−25		25	%
Duty cycle			40	50	60	%
Current consumption		3 MHz Output		5		μA
		12 MHz Output		18		μA
		24 MHz Output		38		μA
Startup time		After VBAT Applied			100	μs

8. For setting of V_{CC} = 1.2 V

Analog Comparator Specifications (ACOMP)

Table 20. ANALOG COMPARATOR SPECIFICATIONS (ACOMP)

Parameter	Symbol	Conditions	Min	Typ	Max	Unit
Input voltage range		Rail−to−rail input	0		VBAT	V
Input offset		Full common mode range	−10		10	mV
Hysteresis		Low power setting	40		90	mV
		Normal setting	40		110	
		High speed setting	40		220	
Comparator delay		Low power setting		120		μs
		Normal setting		1.5		μs
		High speed setting		0.2		μs
Current consumption		Low power setting		10		nA
		Normal setting		1.5		μA
		High speed setting		18		μA

Successive Approximation ADC (SAR ADC) Specifications

Table 21. SUCCESSIVE APPROXIMATION ADC (SAR ADC) SPECIFICATIONS

Parameter	Symbol	Conditions	Min	Typ	Max	Unit
ADC reference voltage	VREF	VBAT selected as reference VREF	1.8		3.6	V
		GPIO[9] selected as reference VREF	1.8		VDDO	V
Resolution				12		Bits
Input voltage range			0		VREF	V
Differential input voltage range			−VREF		VREF	V
Sampling rate		VREF ≥ 2.5 V			2	Msps
		VREF 2.0 V to 2.5 V			0.5	Msps
		VREF 1.8 V to 2.0 V			0.125	Msps
LSB weight		12 bits resolution at VREF = VBAT = 3.6 V		1.6		mV
Absolute gain error			−2		+2	%
INL			−4		4	LSB
DNL			−1.5		1.5	LSB
Offset		After calibration	−5		5	LSB
Gain error		After calibration	−1		1	%
Noise		RMS noise in LSB for a constant input voltage			2	LSBrms
Input capacitance				1		pF
Array calibration time				650		cycles
Current consumption				26		μA / Msps

Low Speed ADC Converter (LSAD) Specifications

Table 22. LOW SPEED ADC CONVERTER (LSAD) SPECIFICATIONS

Parameter	Symbol	Conditions	Min	Typ	Max	Unit
Resolution	ADC_{RES}		8	12	14	bits
Precision	ADC_{PRES}	0−50°C	−20		20	mV
Input voltage range	ADCRANGE		0		2	V
INL	ADC_{INL}		−2		+2	mV
DNL	ADC_{DNL}		−1		+1	mV
Channel sampling frequency	ADCCH_SF	8 channels are converted sequentially, ADC running at 50 kHz	0.0195		6.25	kHz

NOTE: All LSAD parameters are for SLOWCLK at 1 MHz.

Table 23. DAC SPECIFICATIONS

Parameter	Symbol	Conditions	Min	Typ	Max	Unit
Output voltage range	Vout	Cannot exceed VDDO	0.1		VDDA − 0.2	V
Output voltage step size	Vsteps			16		mV
Output current	Iout	Max current results in a typ 50 mV drop on the pad, VDDO > 2.2V	0		10	μA

Temperature Sensor Specifications

Table 24. TEMPERATURE SENSOR SPECIFICATIONS

Parameter	Symbol	Conditions	Min	Typ	Max	Unit
Accuracy potential		Requires calibration by the customer	−2		2	°C
Temperature sensor output voltage @ 25°C		Uncalibrated	0.9	0.95	1	V
Temperature sensor gain @ 25°C				21.3		LSB/°C
Startup time		From enable to specified accuracy		100	200	μs
Active current consumption					10	μA

Pulse Counter Specifications

Table 25. PULSE COUNTER SPECIFICATIONS

Parameter	Symbol	Conditions	Min	Typ	Max	Unit
Pulse width			>1 sensor clock cycle			cycle
Pulse count duration		Using accumulation to reach max	0.976		16000	ms

GPIO Interface Specifications

Table 26. GPIO INTERFACE SPECIFICATIONS

Parameter	Symbol	Conditions		Min	Typ	Max	Unit
Voltage level for HIGH Input	VIH			0.75 x VDDO		VDDO +0.3	V
Voltage level for LOW Input	VIL			−0.3		0.25 x VDDO (Note 9)	V
Voltage level for HIGH Output	VOH			VDDO − 0.4			V
Voltage level for LOW Output	VOL					0.4	V
Voltage at GPIO selected as LSAD input	Vlsad			VSSA − 0.3		2	V
Drive Strength (Note 10)	IOH / IOL	VDDO = 3.3 V	Drive = 0		3.4		mA
			Drive = 1		6.8		mA
			Drive = 2		13.5		mA
			Drive = 3		20.2		mA
		VDDO = 1.8 V	Drive = 0		2.0		mA
			Drive = 1		4.0		mA
			Drive = 2		8.0		mA
			Drive = 3		12.1		mA
Weak Pull−up Resistor					250		kΩ
Strong Pull−up Resistor					10		kΩ
Pull−down Resistor					250		kΩ

9. For VDDO < 1.8 V, VIL Max is 0.23 x VDDO.
10. Maximum accumulated current from all GPIO should not exceed 200 mA.

TYPICAL CONNECTION DIAGRAMS

It is recommend to have external access to a UART for general diagnostics and for wired communication during Bluetooth certification. It is also recommend to have a method to load new firmware during Bluetooth certification. Firmware can be loaded by any method such as the Serial Wire Debug (SWD) with pins SWDIO, SWCLK, VDDO (IO voltage domain) and a ground connection. Two GPIO must be externally accessible for the UART. The UART GPIO do not need to be permanently dedicated to UART in the final product as temporary provisions can be made to repurpose the GPIO during certification, as long there is no impact to RF performance.

BUCK Mode Operation

Figure 6 shows RSL15 external components and connections for BUCK Mode operation with GPIO Levels at GND and VBAT.

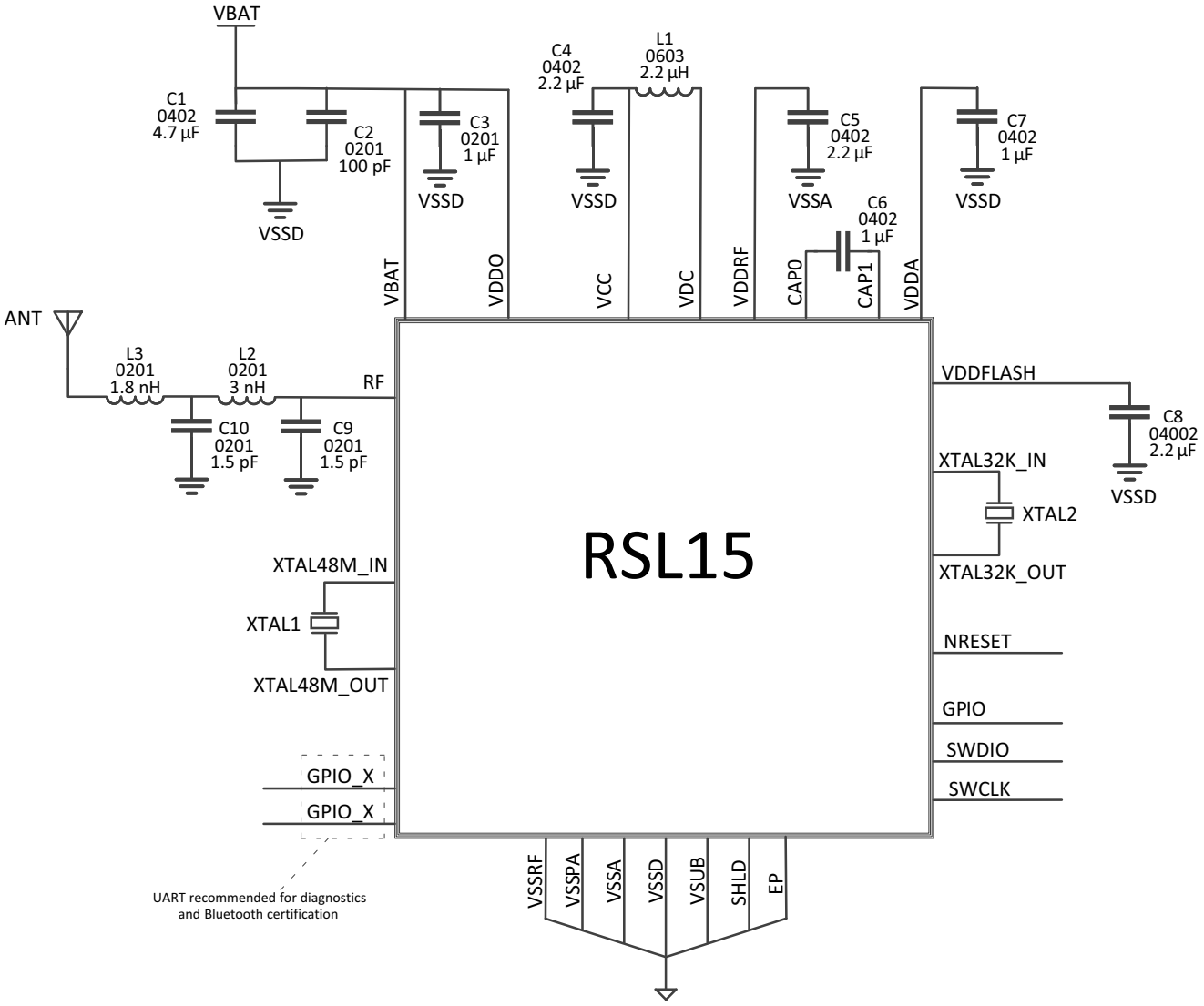

Figure 6. RSL15 BUCK Mode Connection Diagram, VDDO = VBAT

LDO Mode Operation

Figure 7 shows RSL15 external components and connections for LDO Mode operation with GPIO Levels at GND and VBAT.

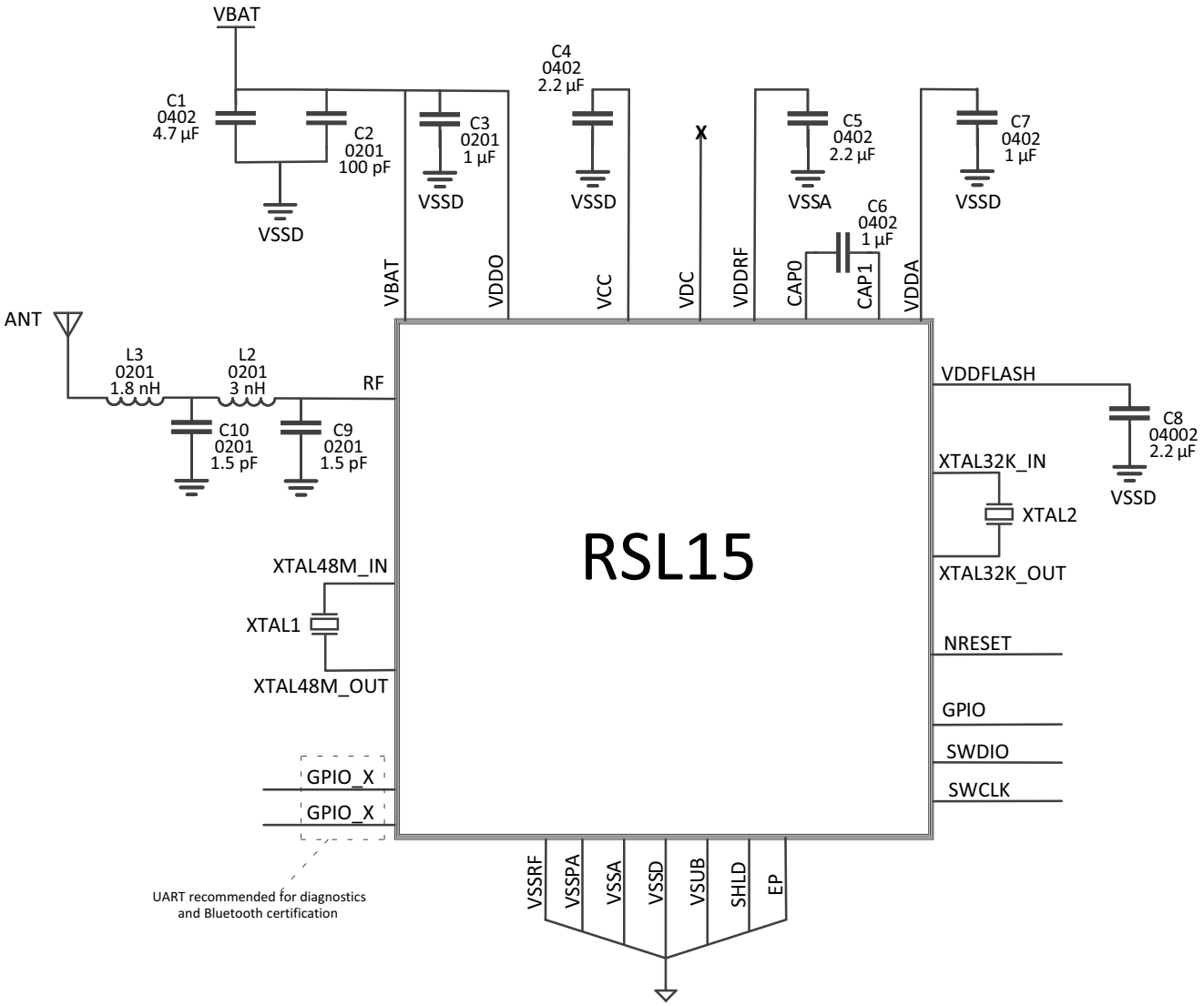

Figure 7. RSL15 LDO Mode Connection Diagram, VDDO = VBAT

External Component Overview

Table 27. RECOMMENDED EXTERNAL COMPONENTS

Components	Function	Recommended Typical Value	Nominal Tolerance
C1, C2	VBAT decoupling	4.7 μF // 100 pF (Note 11)	±20%
C3	VDDO decoupling	1 μF	±20%
C4	VCC decoupling	2.2 μF − GRM155C80J225KE95D, Murata − AMK105BJ225, Taiyo Yuden	±20%
C5	VDDRF decoupling	2.2 μF	±20%
C6	Pump capacitor for the charge pump	1 μF	±20%
C7	VDDA decoupling	1 μF	±20%
C8	VDDFLASH decoupling	2.2 μF	±20%
L1	DC−DC converter inductance	2.2 μH (See Table 28 below)	±20%
XTAL1	XTAL for 48 MHz oscillator	− 416F48022IKR, CTS Frequency Controls − 8Q−48.000MEEV−T, TXC Corporation, Taiwan	
XTAL2	XTAL for 32 kHz oscillator	− 9HT12−32.768KDZF−T, TXC Corporation − MC−306, Epson − CM8V−T1A, Micro Crystal Switzerland	
C9, C10, L2, L3	External harmonic filter	C9 1.5 pF / C10 1.5 pF ±0.25 pF, C0G/NP0, Murata GRM0335C L2 3 nH / L3 1.8 nH ±0.1 nH, Murata LQP03TN (Note 12)	

NOTE: Capacitors C1 to C8 recommendations:
Multilayer ceramic caps with nominal voltage 6.3 V (to reduce capacitance drop due to DC biasing effect), ESR < 0.2 Ω over frequency range 100k − 10MHz, Type X5R with max ±15% variation over temperature range so ±35% total capacitance tolerance.

11. The recommended decoupling capacitance uses 2 capacitors with the values specified.
12. For improved harmonic performance in environments where RSL15 is operating in close proximity to smartphones or base stations, FBAR filters such as the Broadcom ACPF−7924 can be applied instead of the suggested discrete harmonic filter.

Table 28. RECOMMENDED DC−DC CONVERTER INDUCTANCE TABLE

Manufacturer	Part Number	Case Size	Comments
Murata	LQM18PN2R2MGHD	0603 SMD with T_{max} = 1.0 mm	Default inductor used on evaluation board.
Murata	LQM21PZ2R2MC0	0805 SMD with T_{max} = 0.55 mm	Recommended inductor for Vbat > 3.0V to minimize RX sensitivity degradation in Buck mode versus LDO mode operation. A low−profile, AEC−Q200 option.

NOTE: Recommended inductor ESR is 0.2 Ω Typ, 0.5 Ω Max and saturation current 200 mA Min.

PIN DEFINITIONS

QFN40 Pin Out

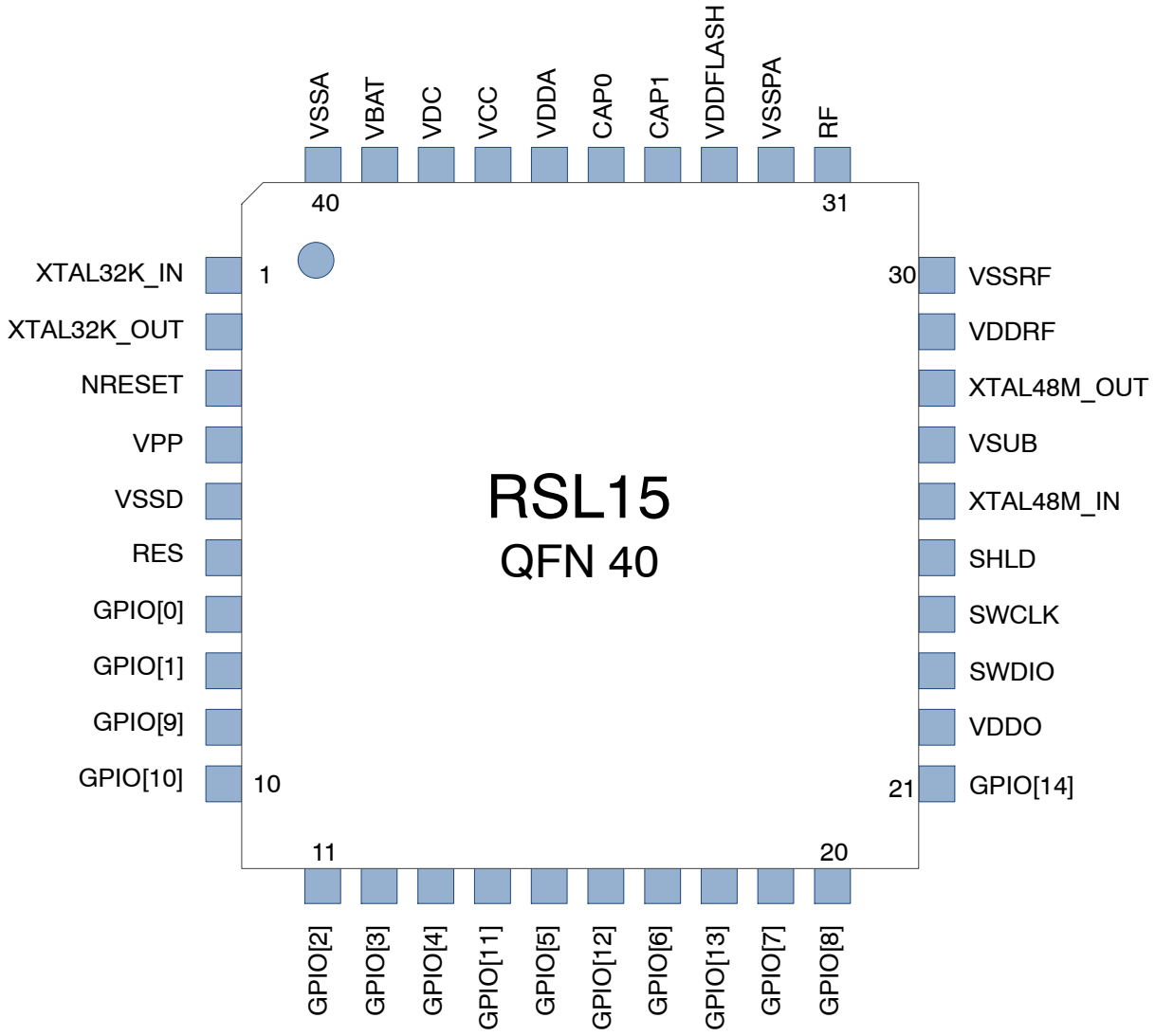

Figure 8. QFN40 Pin Out

Pin Definition and Multiplexing

RSL15 has very flexible pad multiplexing capabilities. Most functions are available on any GPIO. Table 29: Pin Definition lists all pins and their functionality while Table 30: GPIO Multiplexing shows all multiplexed functions available on the GPIO.

Legend:
I = input; O = output; P = power;
Pull: PU = pull up; PD = pull down;

Table 29. PIN DEFINITION AND MULTIPLEXING

Pad Name	Description	Power Domain	Type	Pull	Pad #, QFN
XTAL32K_IN	Input pin for 32 kHz XTAL	VBAT			1
XTAL32K_OUT	Output pin for 32 kHz XTAL	VBAT			2
NRESET	Reset pin	VDDO	I	PU	3
VPP	Flash high voltage access, do not connect (NC)		P		4
VSSD	Core logic ground		P		5
RES	RESERVED, do not connect				6
GPIO[0]	General Purpose I/O, see Table 30: GPIO Multiplexing	VDDO	I/O	PU/PD	7
GPIO[1]	General Purpose I/O, see Table 30: GPIO Multiplexing	VDDO	I/O	PU/PD	8
GPIO[9]	General Purpose I/O, see Table 30: GPIO Multiplexing	VDDO	I/O	PU/PD	9
GPIO[10]	General Purpose I/O, see Table 30: GPIO Multiplexing	VDDO	I/O	PU/PD	10
GPIO[2]	General Purpose I/O, see Table 30: GPIO Multiplexing	VDDO	I/O	PU/PD	11
GPIO[3]	General Purpose I/O, see Table 30: GPIO Multiplexing	VDDO	I/O	PU/PD	12
GPIO[4]	General Purpose I/O, see Table 30: GPIO Multiplexing	VDDO	I/O	PU/PD	13
GPIO[11]	General Purpose I/O, see Table 30: GPIO Multiplexing	VDDO	I/O	PU/PD	14
GPIO[5]	General Purpose I/O, see Table 30: GPIO Multiplexing	VDDO	I/O	PU/PD	15
GPIO[12]	General Purpose I/O, see Table 30: GPIO Multiplexing	VDDO	I/O	PU/PD	16
GPIO[6]	General Purpose I/O, see Table 30: GPIO Multiplexing	VDDO	I/O	PU/PD	17
GPIO[13]	General Purpose I/O, see Table 30: GPIO Multiplexing	VDDO	I/O	PU/PD	18
GPIO[7]	General Purpose I/O, see Table 30: GPIO Multiplexing	VDDO	I/O	PU/PD	19
GPIO[8]	General Purpose I/O, see Table 30: GPIO Multiplexing	VDDO	I/O	PU/PD	20
GPIO[14]	General Purpose I/O, see Table 30: GPIO Multiplexing	VDDO	I/O	PU/PD	21
GPIO[15]	General Purpose I/O, see Table 30: GPIO Multiplexing	VDDO	I/O	PU/PD	Not Available
VDDO	Digital I/O voltage supply	VDDO	P		22
SWDIO	For Serial Wire Debug (SWD) or JTMS for JTAG−DP	VDDO		PU	23
SWCLK	For Serial Wire Debug (SWD) or JTCK for JTAG−DP	VDDO		PU	24

Table 29. PIN DEFINITION AND MULTIPLEXING (continued)

Pad Name	Description	Power Domain	Type	Pull	Pad #, QFN
SHLD	Connect to ground				25
XTAL48M_IN	Input pin for 48 MHz XTAL				26
VSUB	Substrate ground (RF)		P		27
XTAL48M_OUT	Output pin for 48 MHz XTAL				28
VDDRF	LDO for RF		P		29
VSSRF	RF analog ground		P		30
RF	RF signal input/output (Antenna)		I/O		31
VSSPA	Ground for RF PA LDO	VDDA	P		32
VDDFLASH	LDO for Flash	VDDA	P		33
CAP1	Charge pump capacitor	VDDA			34
CAP0	Charge pump capacitor	VDDA			35
VDDA	Charge pump output for analog and flash supplies	VDDA	P		36
VCC	VCC regulator decoupling	VBAT	P		37
VDC	DC−DC output voltage to external LC filter	VBAT	P		38
VBAT	Battery input voltage	VBAT	P		39
VSSA	Analog ground		P		40
EP	Exposed pad, connect to ground				

Table 30. GPIO MULTIPLEXING

GPIO	Mode	Description
0	RTC_CLK_OUTPUT (Note 14)	RTC clock output
0:3	RTC_CLK_INPUT	Input for external RTC clock source
	WAKEUP_SOURCE	Wakeup source from low power modes
	INTERRUPT_SOURCE	Interrupt source
	PULSE_COUNTER_INPUT	Pulse Counter Input
2	JTAG_TDO JTAG	Test Data Out
3	JTAG_TDI JTAG	Test Data In
4	JTAG_TRST JTAG	Test Reset
4	ACS−PWM (Note 13)	Always On PWM in the Analog Control Subsystem (ACS)
7	SDAC_OUTPUT	SDAC output
9	SAR_ADC SUPPLY & REFERNCE	SAR ADC voltage supply and reference (VREF)
0:15	SAR_ADC_INPUT LSAD_INPUT ACOMP_INPUT AOUT	SAR_ADC_INPUT LSAD_INPUT ACOMP_INPUT AOUT
0:15	SLOWCLK (output) SYSCLK (output) USRCLK (output) RCCLK (output) SWCLK (output) EXTCLK (output/input) STANDBYCLK (output) SENSORCLK (output)	Clocking

Table 30. GPIO MULTIPLEXING (continued)

GPIO	Mode	Description
0:15	UART0_RX UART0_TX / LIN0_TX LIN_RX SPI0_MOSI/DATA0 SPI0_MISO/DATA1 SPI0_DATA2 SPI0_DATA3 SPI0_CS SPI0_CLK SPI1_MOSI/DATA0 SPI1_MISO/DATA1 SPI1_DATA2 SPI1_DATA3 SPI1_CS SPI1_CLK I2C0_SCL I2C0_SDA I2C1_SCL I2C2_SDA PWM0 PWM1 PWM2 PWM3 PWM4 PWM0_INV PWM1_INV PWM2_INV PWM3_INV PWM4_INV PCM_SERI PCM_SER0 PCM_FRAME PCM_CLK	Interfaces

13. ACS−PWM has an equivalent 500 Ohm series resistor at the output.
14. RTC_CLK_OUTPUT output level is at VCC in Sleep Mode.

PCB LAYOUT GUIDELINES

1. Decoupling capacitors should be placed as close to the related balls as possible
2. Differential output signals should be routed as symmetrically as possible
3. Analog input signals should be shielded as well as possible
4. Pay close attention to the parasitic coupling capacitors
5. Special care should be made for PCB design in order to obtain good RF performance
6. Multi−layer PCB should be used with a keep−out area on the inner layers directly below the antenna matching circuitry in order to reduce the stray capacitances that influence RF performance
7. All the supply voltages should be decoupled as close as possible to their respective pin with high performance RF capacitors. These supplies should be routed separately from each other and if possible on different layers with short lines on the PCB from the chip's pin to the supply source
8. Digital signals should not be routed close to the crystal or the power supply lines
9. Proper DC−DC component placement and layout is critical to RX sensitivity performance in DC−DC mode. Minimize parasitic capacitance and inductance on the VDC node as much as possible.
10. [QFN only]: Ground EP by vias to a ground plane and/or through at least two VSS pins to PCB surface ground.
11. [QFN only]: Connect SHLD pin to EP, and connect SHLD to an external ground trace shielding XTAL48M_IN from SWCLK.

PACKAGE MARKING INFORMATION

Chip Identification

System identification is used to identify different system components. For the RSL15 chip, the key identifier components and values are as follows:

Chip Family: 0x0B
Chip Version: 0x02
Chip Major Revision: 0x02

ELECTROSTATIC DISCHARGE (ESD) SENSITIVE DEVICE

CAUTION: ESD sensitive device. Permanent damage may occur on devices subjected to high−energy electrostatic discharges. Proper ESD precautions in handling, packaging and testing are recommended to avoid performance degradation or loss of functionality.

SOLDER INFORMATION

The RSL15 QFN package is constructed with all RoHS compliant material and should be reflowed accordingly.

This device is Moisture Sensitive Class MSL1 and must be stored and handled accordingly. Re−flow according to

IPC/JEDEC standard J−STD−020C, Joint Industry Standard: Re−flow Sensitivity Classification for Nonhermetic Solid State Surface Mount Devices. Hand soldering is not recommended for this part.

For more information, see SOLDERRM/D available from http://onsemi.com.

EXPORT CONTROL CLASSIFICATION NUMBER (ECCN)

The ECCN designation for RSL15 is 5a991.g .

Arm, Cortex and TrustZone are registered trademarks and CryptoCell is a trademark of Arm Limited (or its subsidiaries) in the US and/or elsewhere.
Bluetooth and the Bluetooth logo are registered trademarks of Bluetooth SIG.
ULPMark is a trademark of EEMBC in the US and/or elsewhere.

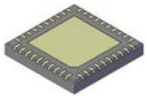

QFNW40 6x6, 0.5P
CASE 484BC
ISSUE O

DATE 14 FEB 2022

NOTES:

1. DIMENSIONING AND TOLERANCING PER ASME Y14.5M, 1994.
2. CONTROLLING DIMENSION: MILLIMETERS
3. DIMENSION b APPLIES TO PLATED TERMINAL AND IS MEASURED BETWEEN 0.15 AND 0.30 MM FROM THE TERMINAL TIP.
4. COPLANARITY APPLIES TO THE EXPOSED PAD AS WELL AS THE TERMINALS.

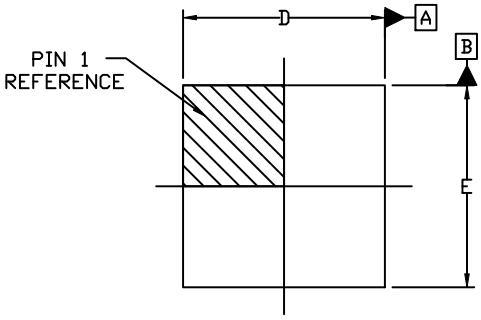

TOP VIEW

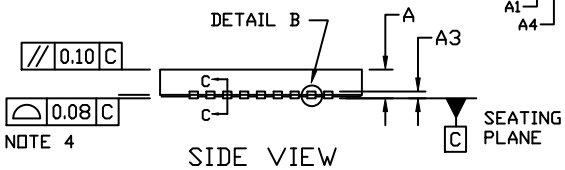

SIDE VIEW

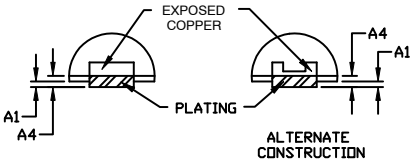

DETAIL B

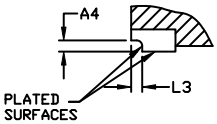

SECTION C-C

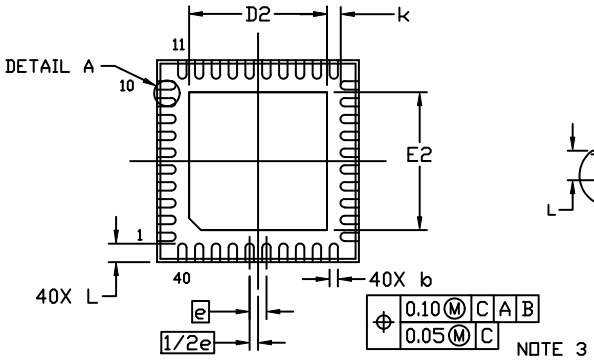

BOTTOM VIEW

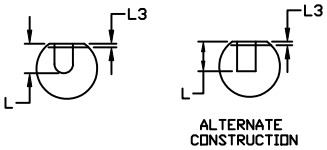

DETAIL A

DIM	MILLIMETERS		
	MIN.	NOM.	MAX.
A	0.80	0.85	0.90
A1	---	---	0.05
A3	0.20 REF		
A4	0.10	---	---
b	0.20	0.25	0.30
D	5.90	6.00	6.10
D2	4.00	4.10	4.20
E	5.90	6.00	6.10
E2	4.00	4.10	4.20
e	0.50 BSC		
K	0.25	---	---
L	0.30	0.40	0.50
L3	0.05	---	---

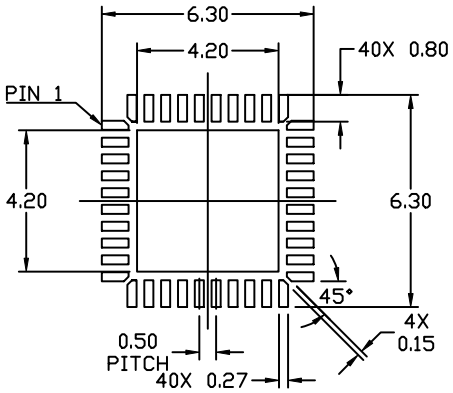

RECOMMENDED
MOUNTING FOOTPRINT

For additional information on our Pb-Free strategy and soldering details, please download the ON Semiconductor Soldering and Mounting Techniques Reference Manual, SOLDERRM/D.

GENERIC
MARKING DIAGRAM*

XXXX = Specific Device Code
A = Assembly Location
L = Wafer Lot
Y = Year
W = Work Week
▪ = Pb-Free Package

*This information is generic. Please refer to device data sheet for actual part marking. Pb-Free indicator, "G" or microdot "▪", may or may not be present. Some products may not follow the Generic Marking.

DOCUMENT NUMBER:	98AON42601H	Electronic versions are uncontrolled except when accessed directly from the Document Repository. Printed versions are uncontrolled except when stamped "CONTROLLED COPY" in red.
DESCRIPTION:	QFNW40 6x6, 0.5P	PAGE 1 OF 1

onsemi and onsemi are trademarks of Semiconductor Components Industries, LLC dba **onsemi** or its subsidiaries in the United States and/or other countries. **onsemi** reserves the right to make changes without further notice to any products herein. **onsemi** makes no warranty, representation or guarantee regarding the suitability of its products for any particular purpose, nor does **onsemi** assume any liability arising out of the application or use of any product or circuit, and specifically disclaims any and all liability, including without limitation special, consequential or incidental damages. **onsemi** does not convey any license under its patent rights nor the rights of others.

onsemi, onsemi, and other names, marks, and brands are registered and/or common law trademarks of Semiconductor Components Industries, LLC dba "**onsemi**" or its affiliates and/or subsidiaries in the United States and/or other countries. **onsemi** owns the rights to a number of patents, trademarks, copyrights, trade secrets, and other intellectual property. A listing of **onsemi**'s product/patent coverage may be accessed at www.onsemi.com/site/pdf/Patent−Marking.pdf. **onsemi** reserves the right to make changes at any time to any products or information herein, without notice. The information herein is provided "as−is" and **onsemi** makes no warranty, representation or guarantee regarding the accuracy of the information, product features, availability, functionality, or suitability of its products for any particular purpose, nor does **onsemi** assume any liability arising out of the application or use of any product or circuit, and specifically disclaims any and all liability, including without limitation special, consequential or incidental damages. Buyer is responsible for its products and applications using **onsemi** products, including compliance with all laws, regulations and safety requirements or standards, regardless of any support or applications information provided by **onsemi**. "Typical" parameters which may be provided in **onsemi** data sheets and/or specifications can and do vary in different applications and actual performance may vary over time. All operating parameters, including "Typicals" must be validated for each customer application by customer's technical experts. **onsemi** does not convey any license under any of its intellectual property rights nor the rights of others. **onsemi** products are not designed, intended, or authorized for use as a critical component in life support systems or any FDA Class 3 medical devices or medical devices with a same or similar classification in a foreign jurisdiction or any devices intended for implantation in the human body. Should Buyer purchase or use **onsemi** products for any such unintended or unauthorized application, Buyer shall indemnify and hold **onsemi** and its officers, employees, subsidiaries, affiliates, and distributors harmless against all claims, costs, damages, and expenses, and reasonable attorney fees arising out of, directly or indirectly, any claim of personal injury or death associated with such unintended or unauthorized use, even if such claim alleges that **onsemi** was negligent regarding the design or manufacture of the part. **onsemi** is an Equal Opportunity/Affirmative Action Employer. This literature is subject to all applicable copyright laws and is not for resale in any manner.

ADDITIONAL INFORMATION

TECHNICAL PUBLICATIONS:
Technical Library: www.onsemi.com/design/resources/technical−documentation
onsemi Website: www.onsemi.com

ONLINE SUPPORT: www.onsemi.com/support
For additional information, please contact your local Sales Representative at
www.onsemi.com/support/sales